blaze | Z1

INSTALLATION INSTRUCTIONS

Contemporary Styled Wood Heaters

BLAZE Z1 LEGS

BLAZE Z1 WOODSTACKER

Australian Home Heating Association Inc.

Glen Dimplex Australia supports the Australian wood heating industry through its membership of the AHHA.

VERSION 1.0

TABLE OF CONTENTS

1. Important Information 2
2. Installing the Heater 3
   - 2.1. Positioning the Heater 3
   - 2.2. Floor Protector (Hearth) 4
3. Reducing Clearances to Combustibles . . . 4
4. Installing the Flue 5
   - 4.1. Solid Flue Shield 5
   - 4.2. Insulated Flue 5
   - 4.3. Single Rear Flue Shield 5
5. Installing the Flue (Continued) 6
   - 5.1. Fitting Flue Seal 6
6. Installing the Baffle Plate 6
7. Installing the Fire Bricks 7
8. Technical Drawings 8
   - 8.1. Z1 Legs 8
   - 8.2. Z1 Woodstacker 9

THE INSTALLATION INSTRUCTIONS IN THIS MANUAL APPLY TO THE BLAZE Z1.

IT HAS BEEN TESTED FOR EMISSIONS AND EFFICIENCY AND COMPLIES ACCORDING TO AS/NZS 4012:2014 & AS/NZS 4013:2014.

INSTALLATION CLEARANCES WERE DETERMINED BY TESTING IN ACCORDANCE WITH AS/NZS 2918.

1. IMPORTANT INFORMATION

Most building regulatory authorities in Australia require any wood heater installation to comply with Installation Standard AS/NZS 2918:2018. Different states and councils may have varying regulations. Check local building regulations before installing the appliance.

All Blaze wood heaters have been tested to ensure that they will meet the appropriate safety Standard requirements if the instructions in this manual are followed. As the safety and emissions performance can be affected by altering the appliance, no modifications are allowed without written permission from the manufacturer.

WE RECOMMEND THAT THE INSTALLATION OF YOUR BLAZE WOOD HEATER BE CARRIED OUT BY A QUALIFIED INSTALLER.

WARNING: THE APPLIANCE AND FLUE SYSTEM SHALL BE INSTALLED IN ACCORDANCE WITH AS/NZS 2918:2018 AND THE APPROPRIATE REQUIREMENTS OF THE RELEVANT BUILDING CODE OR CODES.

WARNING: APPLIANCES INSTALLED IN ACCORDANCE WITH THIS STANDARD SHALL COMPLY WITH THE REQUIREMENTS OF AS/NZS 4012 & AS/NZS 4013 WHERE REQUIRED BY THE REGULATORY AUTHORITY, I.E. THE APPLIANCE SHALL BE IDENTIFIABLE BY A COMPLIANCE PLATE WITH THE MARKING 'TESTED TO AS/NZS 4012 & AS/NZS 4013'.

ANY MODIFICATION OF THE APPLIANCE THAT HAS NOT BEEN APPROVED IN WRITING BY THE TESTING AUTHORITY IS CONSIDERED TO BE IN BREACH OF THE APPROVAL GRANTED FOR COMPLIANCE WITH AS/NZS 4012 & AS/NZS 4013.

Caution: Mixing of appliance or flue-system components from different sources or modifying the dimensional specification of components may result in hazardous conditions. Where such action is considered, the manufacturer should be consulted in the first instance.

Caution: Cracked and broken components, e.g. glass panels or ceramic tiles, may render the installation unsafe

2. INSTALLING THE HEATER

2.1. POSITIONING THE HEATER

First review the necessary **minimum** clearances specified below before considering where to position the heater. These clearances can be greater if desired.

Also check the practicability of installing the flue system in relation to any obstructing roof beams before positioning the heater.

These clearance distances can only be reduced if the surrounding walls are made of non-combustible material, e.g. stone, brick, or concrete. Alternatively, shielding of the wall(s) can reduce clearances (refer to next section for more detail).

2.1.1. STANDARD INSTALLATION

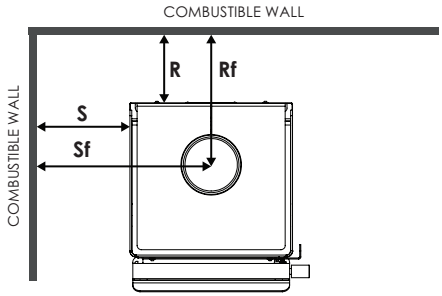

2.1.2. CORNER INSTALLATION

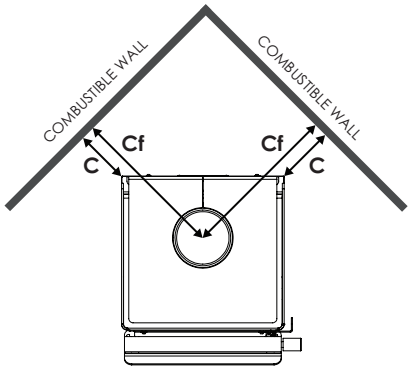

CLEARANCES
STANDARD INSTALLATION

	Solid flue shield **OR** Single rear shield **OR** Insulated
S (Side)	700mm
R (Rear)	150mm
Sf (Side to flue)	925mm
Rf (Rear to flue)	321mm

CLEARANCES
CORNER INSTALLATION

	Solid flue shield **OR** Single rear shield **OR** Insulated
C (Corner)	450mm
Cf (Corner to flue)	729mm

2.2. FLOOR PROTECTOR (HEARTH)

Unless the heater will be standing on a heat resistant floor such as concrete slab with slate or tiles, it will be necessary to provide a floor protector (hearth).

The dimensions given below are the minimum required for the floor protector. It must extend no less than 300mm in front of the door opening, no less than 200mm either side of the door opening, and extend under the heater.

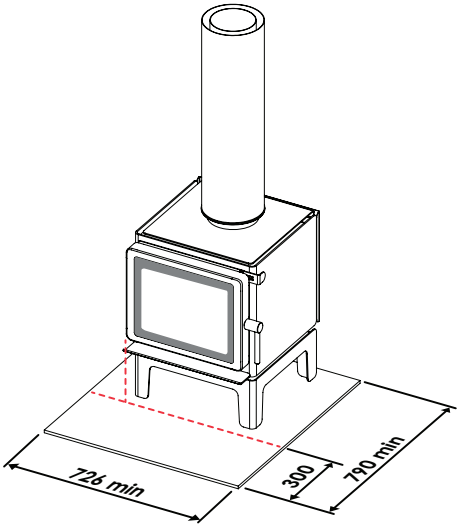

It may be desirable, e.g. for aesthetic reasons, for the floor protector to be larger than these minimum dimensions.

The floor protector must be constructed of non-combustible material no less than **15mm thick** and with a thermal conductivity not greater than 0.33W/m °K, e.g. compressed cement sheet.

The floor protector may be laid directly on the combustible floor.

For more details and variations on floor protectors refer to AS/NZS 2918:2018 Clause 2.2, 3.3.1, & 3.3.2.

3. REDUCING CLEARANCES TO COMBUSTIBLES

If it is necessary to install a heater closer to a combustible surface than the stated requirements in Section 3 of this Installation Guide, it must be done in accordance with Australian Standard AS/NZS 2918:2018 Section 3, Tables 3.1 & 3.2.

Shield Construction: The shield shall be constructed from a heat resistant material. The shield must be fixed to the surface that requires protection and NOT the heater.

The Standard allows three options to reduce stated clearances.

Single layer of continuous material with Minimum Air Gap of 12mm—Clearance Factor = 0.40

Single layer of continuous material with Minimum Air Gap of 25mm—Clearance Factor = 0.30

Two spaced layers of continuous material with Minimum Air Gaps of 12mm + 12mm—Clearance Factor = 0.20

The shielding must be open at the top and bottom (vented) to allow a continuous air flow. It is this air flow that keeps the surface requiring protection cool. Fixings should not impede this air flow.

The shielding needs to go far enough along and up the wall so that the original side and rear required clearances are not compromised. As the flue is now closer to the wall the shielding should also protect the wall from the flue pipe.

For example:

Side wall clearance for the Z1 is 700 mm.

A 12mm gapped shield on the wall with a factor of 0.40.

Calculate: - 700 mm x 0.40 = 280 mm. This is the new side wall minimum clearance.

The shielding needs to be large enough so that none of the original clearances of 700mm are compromised.

4. INSTALLING THE FLUE

The flue system used when installing the heater MUST comply with the current installation standard AS/NZS 2918.

Full instructions on the installation of the flue will be supplied with the flue kit. These MUST be adhered to, including the minimum exit height from the top of the floor protector being not less than 4.6m, and the minimum exit height above the roof line of roof ridge as detailed in the instructions.

The Blaze Z1 uses a 6"/150mm active flue and must be fitted with one of the following:

4.1. SOLID FLUE SHIELD

Note - Solid outer casing must be installed with ventilated locating ring at base of flue shielding.

a. Full length solid outer flue shield casing (7.75" diameter) extending from the heater through into drop box penetrating the ceiling.

b. The manufacturer's 'locating ring' must be used to support the flue shielding up off the heater top. It is important that air can be drawn into the base of the flue shielding.

c. Place the locating ring around the flue spigot (resting on the heater top) and then place the first length of active flue into the spigot. Slide the shielding over the active flue. Locate the bottom of the solid outer shield inside the locating ring.

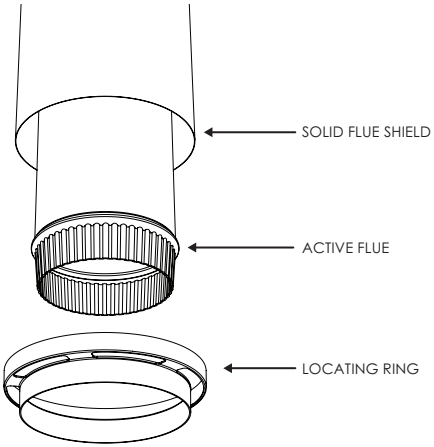

4.2. INSULATED FLUE

a. Full length fully insulated flue pipe (7.75" diameter) extending from the heater, penetrating the ceiling and continuing through to roof termination.

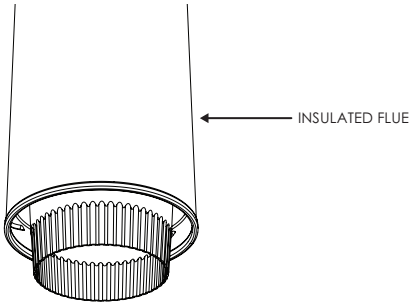

4.3. SINGLE REAR FLUE SHIELD

a. 900 mm long, minimum 160° arc, stainless steel painted black rear flue shield with 25mm gap between it and the active flue, and a 10mm gap between the base of the shield and the top plate of the heater.

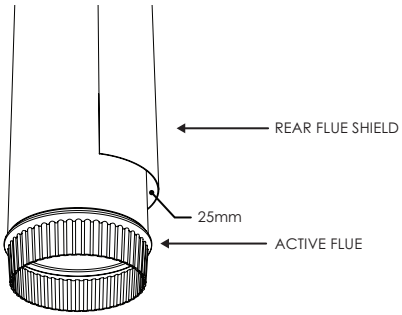

5. INSTALLING THE FLUE (CONTINUED)

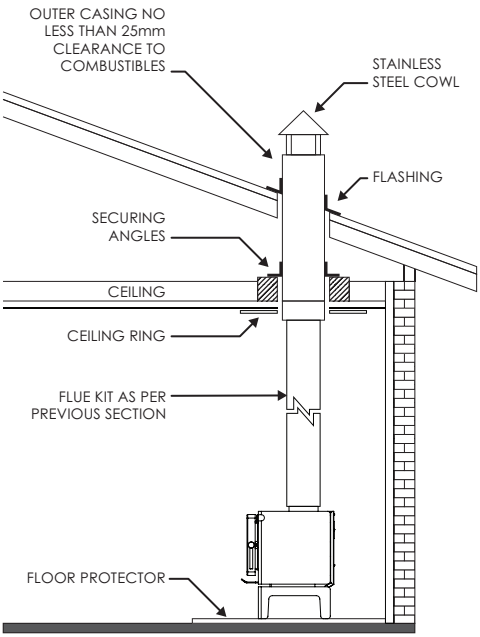

If the draft is insufficient or periodic down drafting occurs and the heater smokes or only burns slowly, extending the flue or fitting a specialised cowl will usually resolve the issue.

5.1. FITTING FLUE SEAL

Any gaps between the inside of the flue spigot and the active flue should be sealed. This can be done by wrapping the bottom of the flue with a length of fibreglass tape. Alternatively, high temperature stove cement can also be used.

6. INSTALLING THE BAFFLE PLATE

The baffle plate should be installed before installing the fire bricks.

1. Place the baffle inside the firebox.

2. Raise the baffle, tilting the right side upwards. Raise the right side of the baffle over the right side baffle rail. Once clear of the right rail, push the baffle to the right side of the heater in order to clear the left baffle rail.

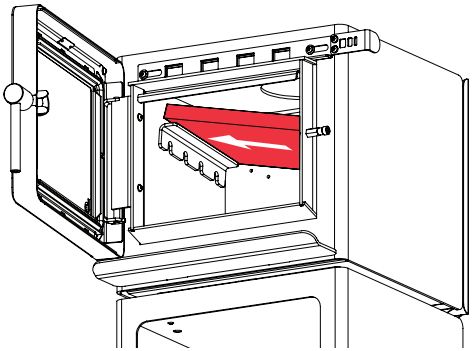

3. Push the baffle back so that it is resting hard up against the rear of the firebox.

4. Once resting on both baffle rails, centralise the baffle so that gaps between each side and firebox are equal.

5. Install front baffle retainer onto baffle.

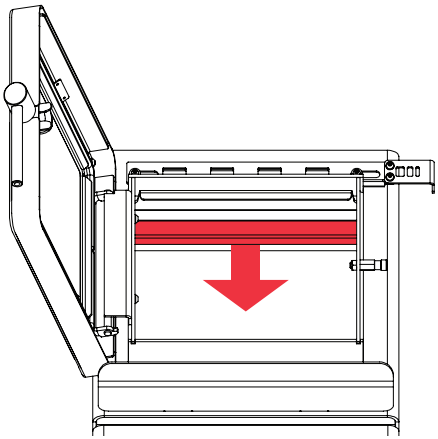

7. INSTALLING THE FIRE BRICKS

Place the bricks into the firebox as shown in the diagram below. Once bricks are in, fit the retainers over the top to hold them in place.

1. Place three bricks along the back: one (220 x 85 x 25) in the middle and two (220 x 175 x 25) on either end.

2. One full size (220 x 175 x 25) and one half size (220 x 85 x 25) along each side.

3. Place upper brick retainers on top to hold the bricks upright and in place.

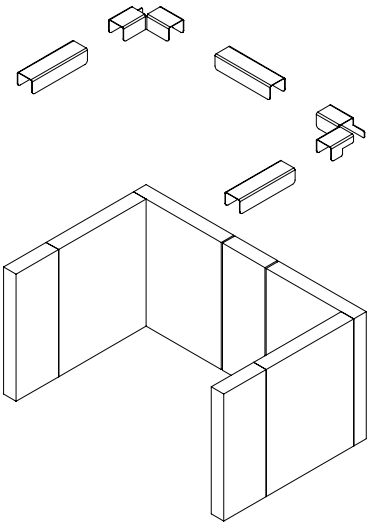

8. TECHNICAL DRAWINGS

8.1. Z1 LEGS

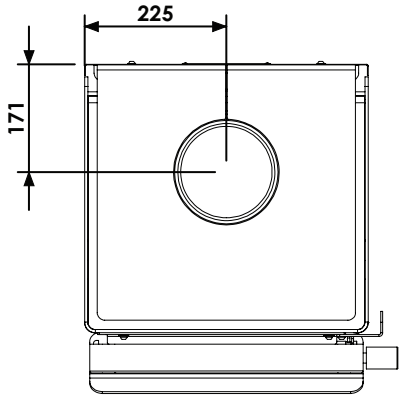

TOP

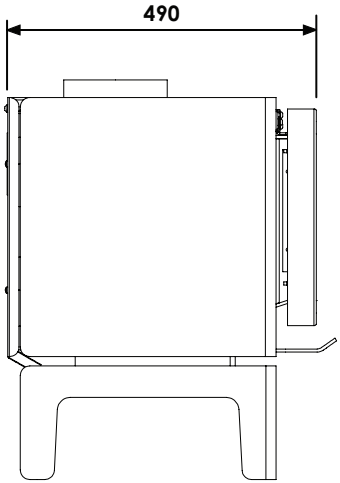

LEFT

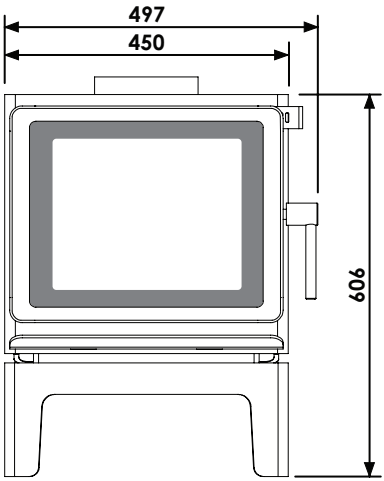

FRONT

8.2. Z1 WOODSTACKER

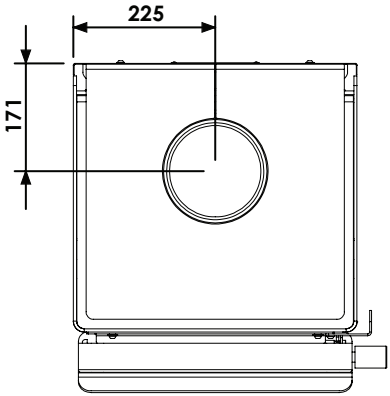

TOP

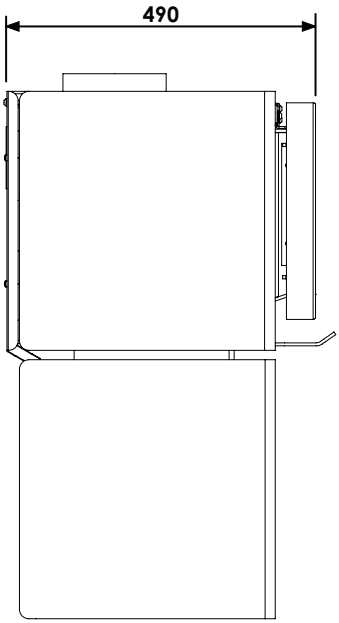

LEFT

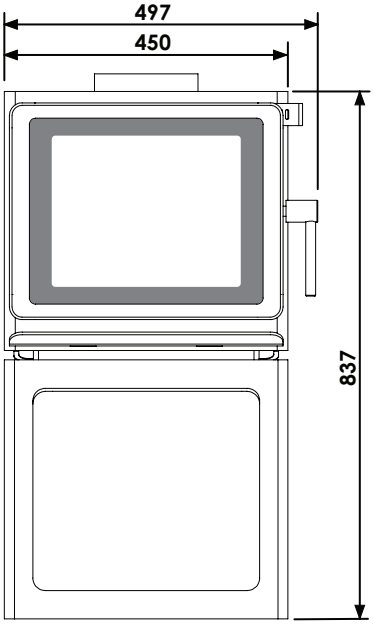

FRONT

Glen Dimplex Australia Pty Ltd

8 Lakeview Drive,
Scoresby Victoria 3179
Australia

T: 1300 554 155

General & Sales Enquiries: flame.care@glendimplex.com.au

Technical Service: flame.support@glendimplex.com.au

www.glendimplex.com.au